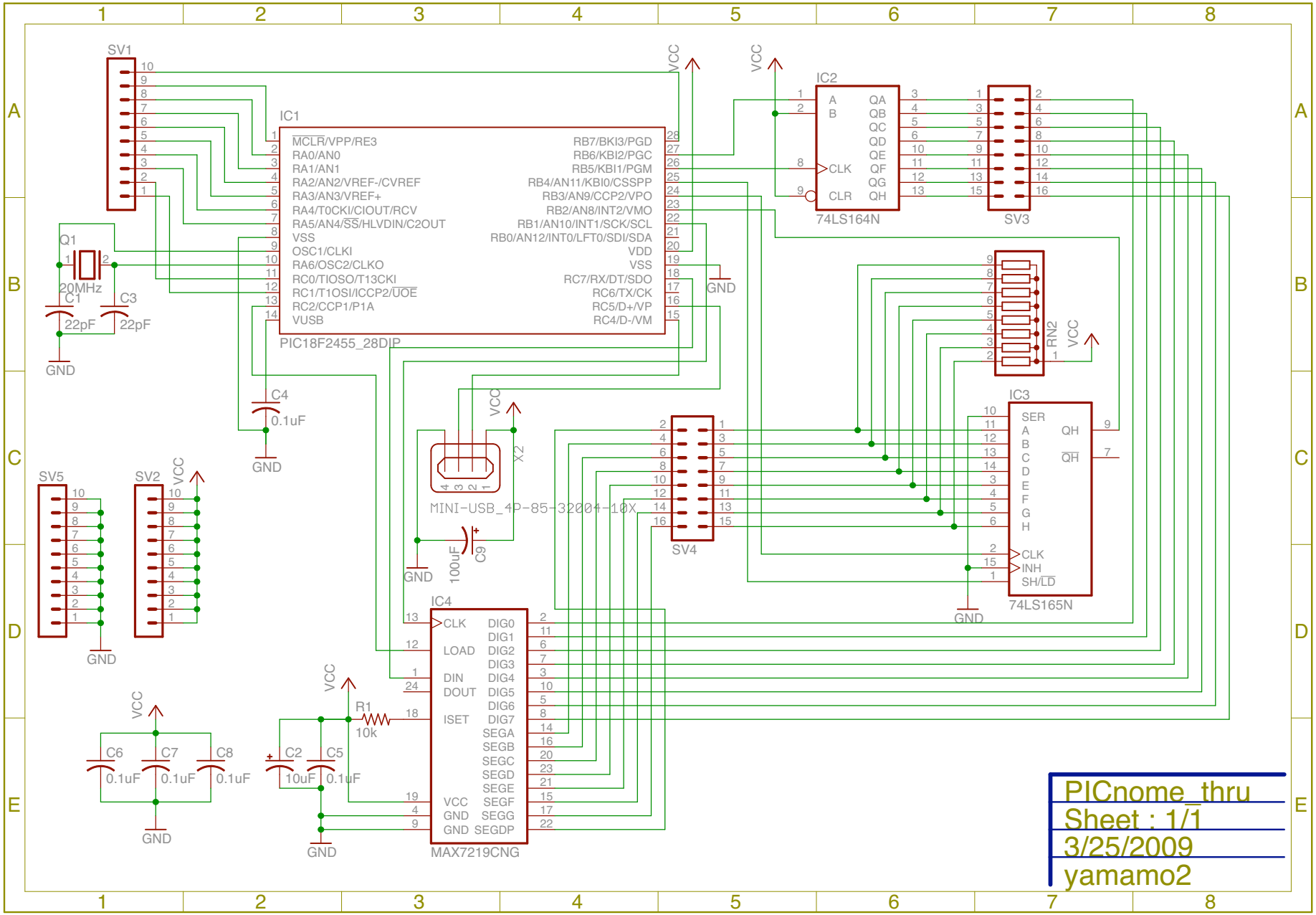
SV1
IC1
MCLR/VPP/RE3
RA0/AN0
RA1/AN1
RA2/AN2/VREF-/CVREF
RA3/AN3/VREF+
RA4/T0CKI/CIOUT/RCV
RA5/AN4/SS/HLVDIN/C2OUT
VSS
OSC1/CLKI
RA6/OSC2/CLKO
RC0/TIOSO/T13CKI
RC1/T1OSI/ICCP2/UOE
RC2/CCP1/P1A
VUSB
RB7/BKI3/PGD
RB6/KBI2/PGC
RB5/KBI1/PGM
RB4/AN11/KBI0/CSSPP
RB3/AN9/CCP2/VPO
RB2/AN8/INT2/VMO
RB1/AN10/INT1/SCK/SCL
RB0/AN12/INT0/LFT0/SDI/SDA
VDD
VSS
RC7/RX/DT/SDO
RC6/TX/CK
RC5/D+/VP
RC4/D-/VM
PIC18F2455_28DIP
Q1
20MHz
C1
22pF
C3
22pF
GND
C4
0.1uF
VCC
IC2
A
B
CLK
CLR
QA
QB
QC
QD
QE
QF
QG
QH
74LS164N
SV3
RN2
IC3
SER
QH
CLK
INH
SH/LD
74LS165N
X2
MINI-USB_4P-85-32004-10X
C9
100uF
SV4
SV5
SV2
IC4
CLK
LOAD
DIN
DOUT
ISET
VCC
GND
DIG0
DIG1
DIG2
DIG3
DIG4
DIG5
DIG6
DIG7
SEGA
SEGB
SEGC
SEGD
SEGE
SEGF
SEGG
SEGDP
MAX7219CNG
R1
10k
C6
0.1uF
C7
0.1uF
C8
0.1uF
C2
10uF
C5
0.1uF
PICnome_thru
Sheet : 1/1
3/25/2009
yamamo2