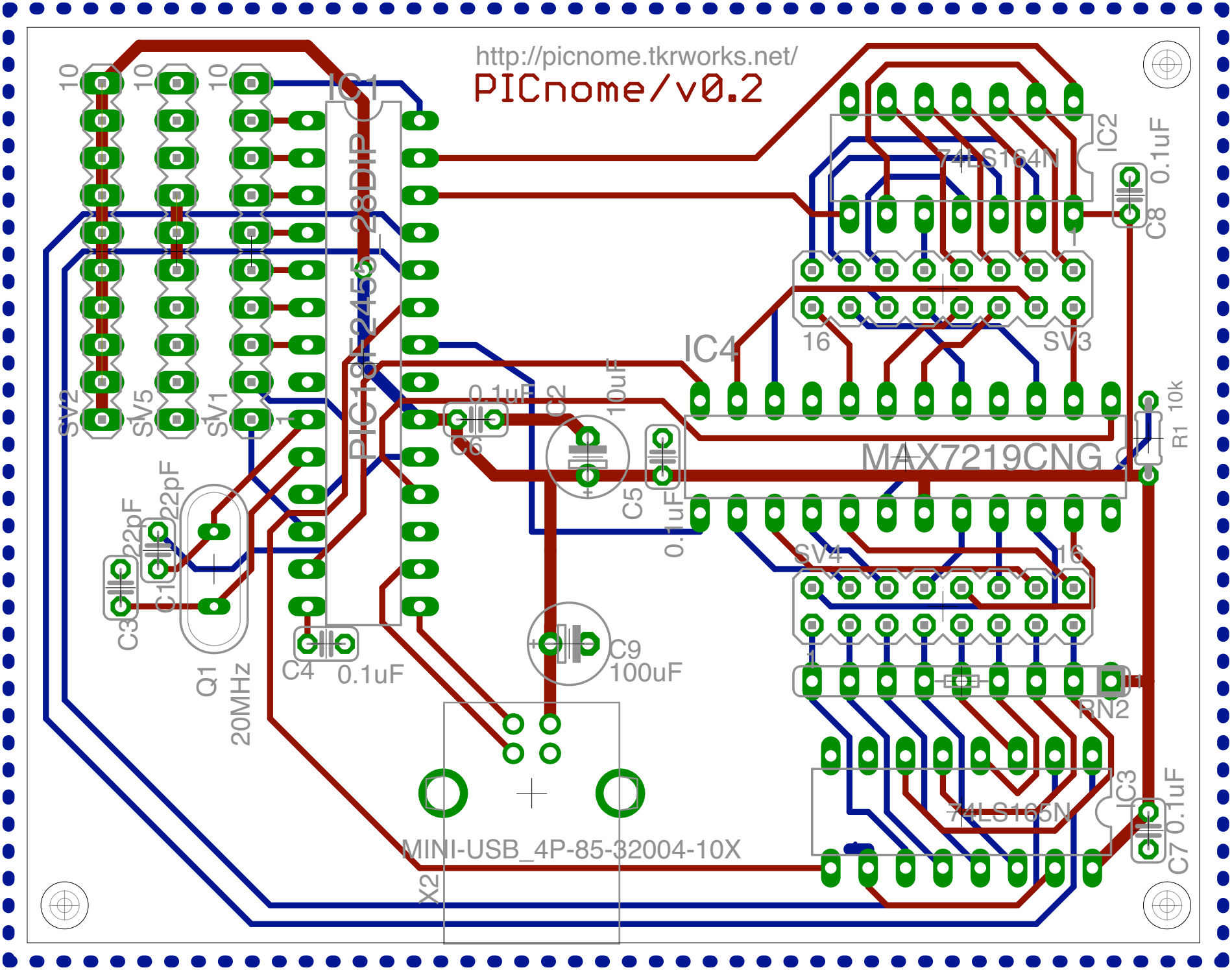
http://picnome.tkrworks.net/
PICnome/v0.2
IC1
PIC18F2455_28DIP
IC2
74LS164N
C8
0.1uF
IC4
MAX7219CNG
SV3
16
SV4
16
R1
10k
RN2
IC3
74LS165N
C7
0.1uF
SV2
SV5
SV1
10
10
10
C1
22pF
C3
22pF
Q1
20MHz
C4
0.1uF
C6
0.1uF
C2
10uF
C5
0.1uF
C9
100uF
X2
MINI-USB_4P-85-32004-10X